PRT/CLUB TRUSSING
24”x20.5” SOURCE FOUR LIGHTS

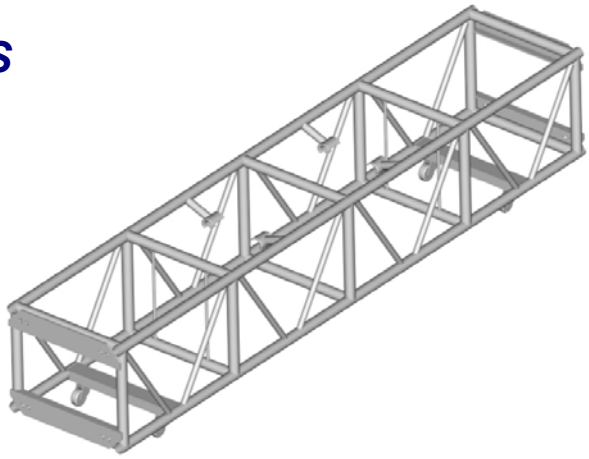

S4 PRT/CLUB TRUSS FEATURES
Heavy Duty Aluminum Structure
Removable Pre-Wired Light Bar
Lights Can Be Focused In Up Position With Minimal Obstruction
Light Bar Drops Fixture Through Bottom For Full Focus Ability
Highly Polished 6061-T6 Aluminum Tubing
Heavy Duty Structural Aluminum End Plates
8 Bolt Pattern
Bolts Up To 20.5 x 20.5 HD Box Truss

LAMP BARS AND CASTERS SOLD SEPARATELY

PRT/CLUB TRUSS CORNER ADAPTERS
4-Way Corner Block

24”x20.5” S4 PRT/CLUB TRUSS INFO

Part Number	Dimensions	Weight
12-04-120	24” x 20.5” x 120”	100 lbs.
12-04-093	24” x 20.5” x 93”	80 lbs.

24”x20.5” S4 PRT/CLUB TRUSS WEIGHT LOADING INFO

Length	10’ Span	20’ Span	30’ Span	40’ Span
Uniform Distribution	7000 lbs.	5500 lbs.	3500 lbs.	2000 lbs.
Center Point Load	2200 lbs.	1800 lbs.	1600 lbs.	1100 lbs.

MOVING LIGHT TRUSS - MLT 1000

MLT 1000 FEATURES
Affordable
Small Transportation Space Requirements
Internal Hardware Secured To Truss With Lanyards
Center Bar For Loading Fixtures
Side Ladders Fold Down And Secure With Claws
Composed of 3 Detachable Ladders And Two Removable Wheel Carts

MLT 1000 ORDERING INFORMATION

Part Number	Dimensions	Weight
12-00-120	18” x 28” x 10’	200 lbs.

MLT 1000 WEIGHT LOADING INFO

Length	10’ Span	20’ Span	30’ Span	40’ Span	50’ Span	60’ Span
Uniform Distribution	5470 lbs.	5080 lbs.	4320 lbs.	3640 lbs.	3500 lbs.	3000 lbs.
Center Point Load	2880 lbs.	2712 lbs.	2640 lbs.	2568 lbs.	2304 lbs.	1872 lbs.
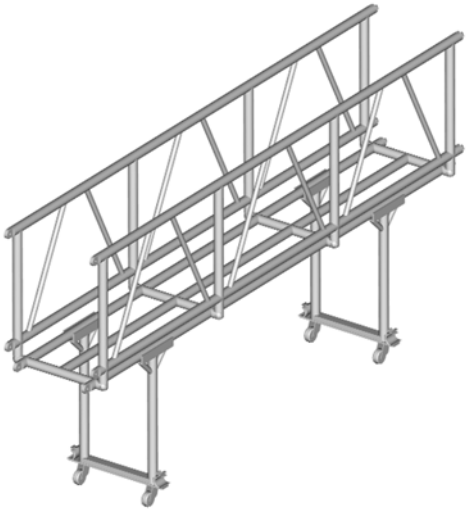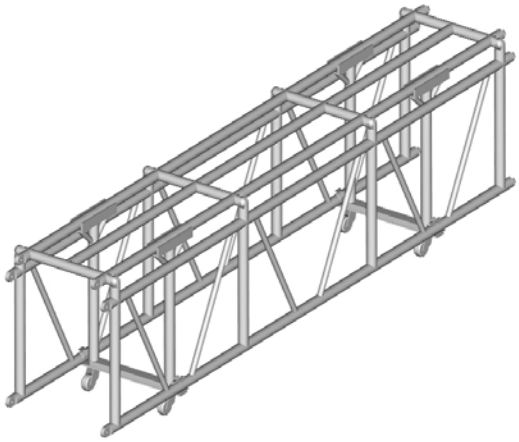
***Weight Load Certified By Structural Engineering Firm**